WT-SERIES
TURBINE METERS

Seametrics
Precision Flow Measurement
An ONICON Brand

RIGHT METER FOR

Water treatment

Municipal

Cooling water monitoring

Industrial flow control

Features

- One moving part
- Low friction jewel bearings
- Field repairable
- Choice of materials
- Variety of displays and controls

This unique system of 3" to 8" turbine meters uses just one moving part, a precision helical rotor. Rotation of the rotor is electronically detected and processed. The high-quality jewel bearings and shafts minimize friction while providing long life in non-lubricating fluids. The entire rotor assembly can be easily removed for field service without removing the meter from the pipe.

WTP bodies are fabricated from Schedule 80 PVC fittings and WTS bodies from stainless steel tubing. The turbine insert on WTS meters is machined from a stainless steel casting. The WTP turbine insert is machined from a solid piece of PVC. Turbine rotors on all models are Kynar (PVDF).

WT meters can be ordered with various output options. The basic model (100) comes with pulse output only. An electronic display (Seametrics FT430/440) can be mounted on the 103 and 109 models to display flow rate and total (resettable or non-resettable), and provide a programmable pulse or 4-20 mA output. Other electronics options include a blind 4-20 mA transmitter (AO55) on the 102 model and a battery-powered (FT450) rate/totalizer plus pulse output for applications that lack power (107 model). All of these controls/displays can be mounted on the meter or remotely mounted on a wall or panel up to 2,000 feet away. WT-Series meters are compatible for use with other remote-mount Seametrics displays and controls as well.

Contact Your Supplier

Specifications*

		WTP			WTS			
Pipe Sizes		3", 4", 6"			3", 4", 6", 8"			
Materials	**Meter Body**	PVC Schedule 80 fittings			304 Stainless steel (316 SS optional)			
	Turbine Insert	PVC			CF8 cast stainless			
	Rotor	Kynar® (PVDF)			Kynar® (PVDF)			
	Shaft	Zirconia ceramic			Zirconia ceramic			
	Bearings	Sapphire journal, ruby endstone			Sapphire journal, ruby endstone			
Cable		#22 AWG, 2000' max			#22 AWG, 2000' max			
Flanges		Optional (See dimensions)			150 lb. drilling			
Maximum Pressure		150 psi @ 75° F) (10 bar @ 24° C) (See chart)			200 psi (14 bar)			
Maximum Temperature		120° F (50° C) (See chart)			200° F (93° C)			
Accuracy		± 1% of full scale			± 1% of full scale			
Flow Range (GPM)		**3"**	**4"**	**6"**	**3"**	**4"**	**6"**	**8"**
	Minimum	3	6	12	3	6	12	30
	Maximum	400	600	1200	400	600	1200	3000

Kynar is a registered trademark of Arkema, Inc.
** Specifications subject to change. Please consult our web site for current data (seametrics.com).*

Electronics Options Specifications*

	WT100	WT102	WT103	WT107	WT109
Power	6-36 Vdc	24-36 Vdc (isolated)	7-30 Vdc	Battery (Lithium "C", 3.6V, replaceable)	7-30 Vdc, 4mA (4-20 mA when loop powered)
Electronic Display		A055	FT430	FT450	FT440
Pulse Out	0-160 pulse/sec. current sinking		Pulse scaled and pulse pass through	Pulse scaled	Pulse scaled
Analog Out		4-20 mA Loop			4-20 mA Loop
Rate			5-digit autorange	5-digit autorange	5-digit autorange
Total			8-digit	8-digit	8-digit
Memory			Non-volatile	Non-volatile	Non-volatile
Response Time		2-60 seconds, 90% full scale, (depending on input averaging)			
High/Low Alarm			Selectable on one output	Selectable on one output	Selectable on one output
Environmental		NEMA 4X, IP66	NEMA 4X, IP67	NEMA 4X, IP67	NEMA 4X, IP67
Regulatory	CE Mark	CE Mark	CE Mark	CE Mark	CE Mark

Features

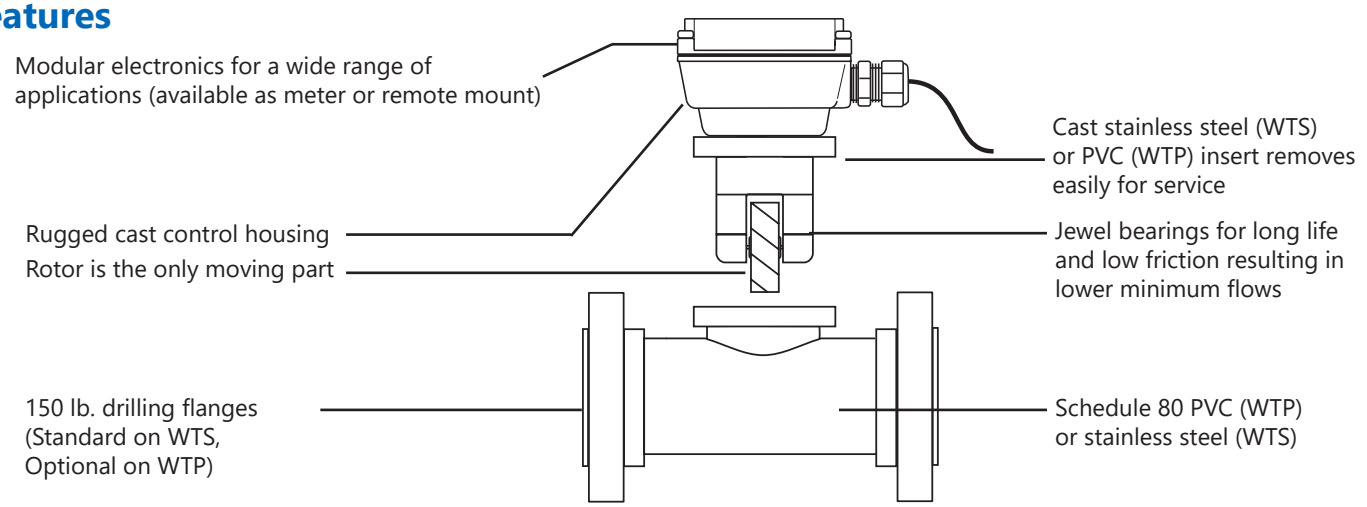

Dimensions

WTP METER

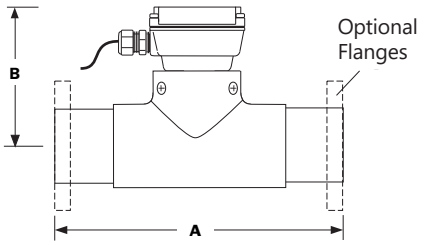

Meter Size	Dim A	Dim B
3″	12″	6.5″
4″	14″	7.0″
6″	18″	8.5″
NOTE: Flange options face-to-face dimension ("A") is the same as plain ends.		

WTS METER

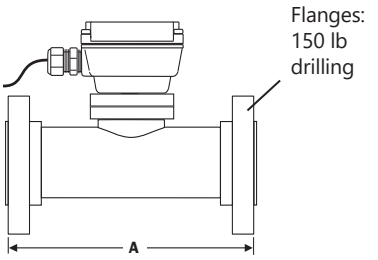

Meter Size	Dim A
3″	12″
4″	14″
6″	18″
8″	20″

Pressure and Temperature

Pressure Loss Chart (WTP & WTS)

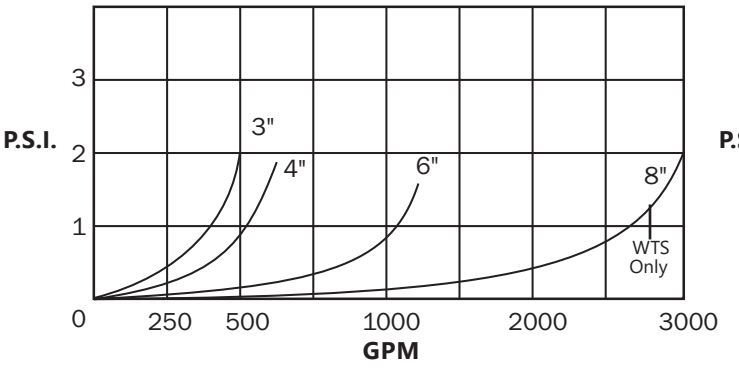

Pressure vs. Temperature (WTP Only)

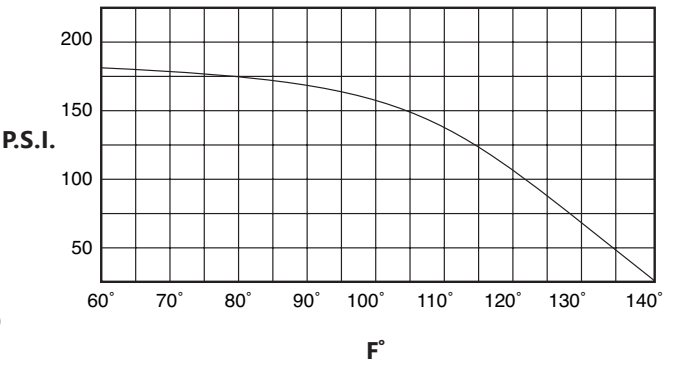

Typical Application

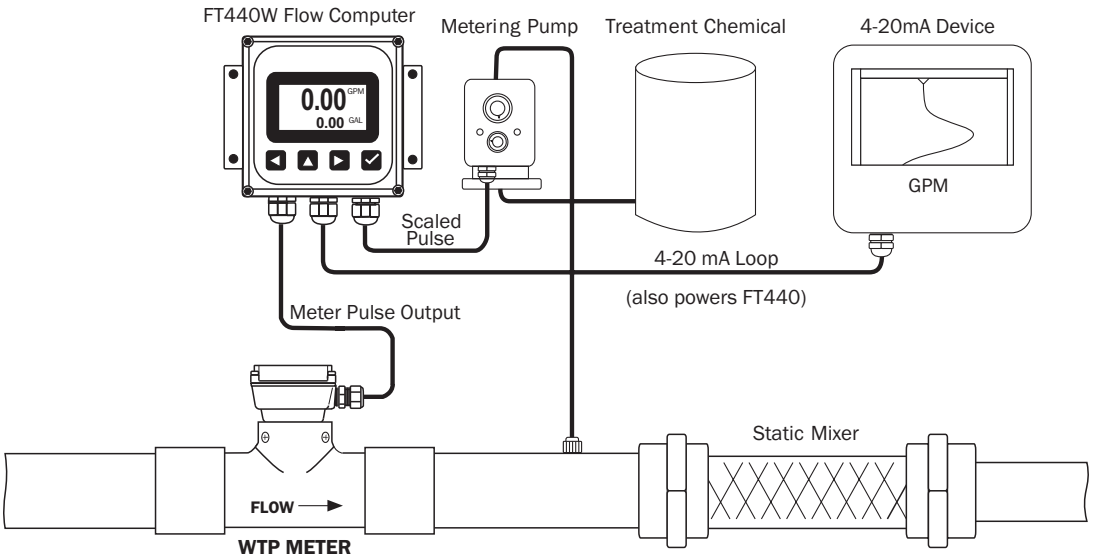

How to Order

MODEL

PVC = **WTP**

Stainless Steel = **WTS**

ELECTRONICS

Pulse Output = **100**

4-20 mA only = **102**

Rate+Total/Pulse Scaled/ Pulse Pass Through = **103**

Battery-Powered/Pulse = **107**

Rate+Total/Pulse Scaled/ 4-20mA = **109**

SIZE

3″ = **-300**

4″ = **-400**

6″ = **-600**

8″ = **-800** *(WTS Only)*

OPTIONS

Micropower Sensor = **-04**
(For use with FT450W)

LMI 4-pin Connector = **-06**
(For use with WT100 only)

Seametrics Control Connector = **-07**
(For use with WT100 only)

316 SS *(WTS only)* = **-14**

Flanged Ends *(WTP)* = **-18**

Tamper-evident = **-32**

Non-resettable total = **-64**

Dual Relay Output = **-98**
(For use with WT103, 109 only)

Roytronics® Series A 5-pin Pump Connector = **-106**
(For use with WT100 only)

Hinged Display Cover = **-126**

ACCESSORIES

Remote Rate and Total Indicator = **FT430W/440W**

Remote Blind 4-20 mA Converter = **AO55W**

Remote Battery-Operated Rate/Totalizer = **FT450W**

Remote Pulse Divider = **PD10W**

Seametrics • 19026 72nd Avenue South • Kent, Washington 98032 • USA
(P) 253.872.0284 • (F) 253.872.0285 • 1.800.975.8153 • seametrics.com

LT-65650039r4.2-20180927
9/27/2018